SSR212

SINGLE DRUM
ROLLER

27,337 LBS OPERATING WEIGHT
84” VIBRATION DRUM
24~32/28~36 VIBRATION FREQUENCY LOW & HIGH



PRECISION **ROLLER ULTIMATE**
COMPACTOR

EASY TO OWN, OPERATE, & SERVICE

SSR212

INDUSTRY'S STRONGEST STANDARD WARRANTY
3-YEAR* 3,000 HOURS

*Warranty applies to 2026 Crane, Telehandler, Grader and Roller models only.

A MACHINE BUILT AROUND YOU

In the heart of America's road and infrastructure projects, contractors rely on the SSR212 Single Drum Roller to deliver consistent compaction performance day after day. Every pass matters, and the SSR212 is built to handle demanding jobsite conditions with confidence. Its high-traction mode provides reliable drive performance on challenging surfaces, while the lower overall machine height improves transport clearance and jobsite mobility. Designed to meet real-world needs, the SSR212 offers multiple configurations to fit different applications, and its robust design helps protect productivity hour after hour. Backed by SANY's dealer network and North American support team, operators can count on the SSR212 to be ready when the job demands it. For contractors who value durability, efficiency, and ease of operation, SANY delivers the compaction solution they depend on to get tough work done.











LP | LOWER PROFILE DESIGN

The SSR212 features a lower overall machine height, improving transport clearance and making it easier to move between jobsites. This lower profile also enhances stability during operation, especially on uneven or confined jobsite conditions.

HIGH-TRACTION MODE– STANDARD

Designed for demanding compaction work, the SSR212 comes standard with high-traction mode across the entire lineup. This provides confident drive performance on slopes, loose materials, and challenging surfaces, helping operators maintain consistent compaction results pass after pass.

COMPONENTS YOU TRUST

All SANY roller are built with components by brands you know and trust. From Cummins to Kawasaki to Parker, you're getting a machine made with familiar, proven, reliable systems that offer ample support. It's an ecosystem of dependable components that make ownership easier.

CONFIGURATIONS THAT FIT THE JOB

To meet diverse market needs, the SSR212 offers four configurations; including cab with smooth drum and cab with padfoot, as well as canopy with smooth drum and canopy with padfoot. This flexibility allows contractors to select the right setup for soil, asphalt base, or mixed applications without compromise.

BUILT FOR AMERICAN JOB SITES

From road construction to site development, the SSR212 Single Drum Roller delivers dependable compaction, easy transport, and operator-focused design. It's a machine that works hard, adapts easily, and makes ownership simple—day after day.

30% MORE

service access efficiency and simplified maintenance layout compared to previous-generation designs.

A MACHINE THAT'S EASY TO OWN

Built for versatility and ease of ownership, the SSR212 Single Drum Roller delivers reliable compaction performance across a wide range of applications—from road construction and site development to utility and infrastructure work. Its lower overall machine height improves transport clearance, making it easier to move between jobsites while maintaining stable, confident operation in demanding conditions. Designed with proven components and supported by SANY's North American dealer network, the SSR212 offers dependable reliability and straightforward maintenance. The result is a machine that works hard, adapts easily to changing jobsite demands, and keeps ownership simple—day after day.

RELIABLE FROM THE INSIDE OUT

Working long hours, protecting your crew and keeping revenue flowing, the SSR212 is built to be truly reliable—engineered to withstand thousands of hours in the toughest conditions. Its structural design handles the stress of constant blading and ditch work, while the hydraulic system delivers consistent power, force and pressure. The powertrain runs at thousands of RPM all day long to keep the hydraulic pumps working without a break. Every design choice is made to minimize downtime and maximize productivity. That's why it's backed by a 3-year / 3,000-hour standard warranty—delivering reliability that doesn't compromise your schedule.



STRUCTURAL INTEGRITY

SANY machines don't cut corners on steel. We build each machine with the material it needs to deliver strength, stability and durability. Reinforced booms and sticks with internal ribbing add stiffness and rigidity, while the reinforced X-frame undercarriage is built to take a beating on the toughest terrain. In our state-of-the-art factories, robotic welding and CNC cutting ensure every part fits properly and is welded to last. Strict quality control then confirms the structural integrity meets our standards before it ever reaches your jobsite.

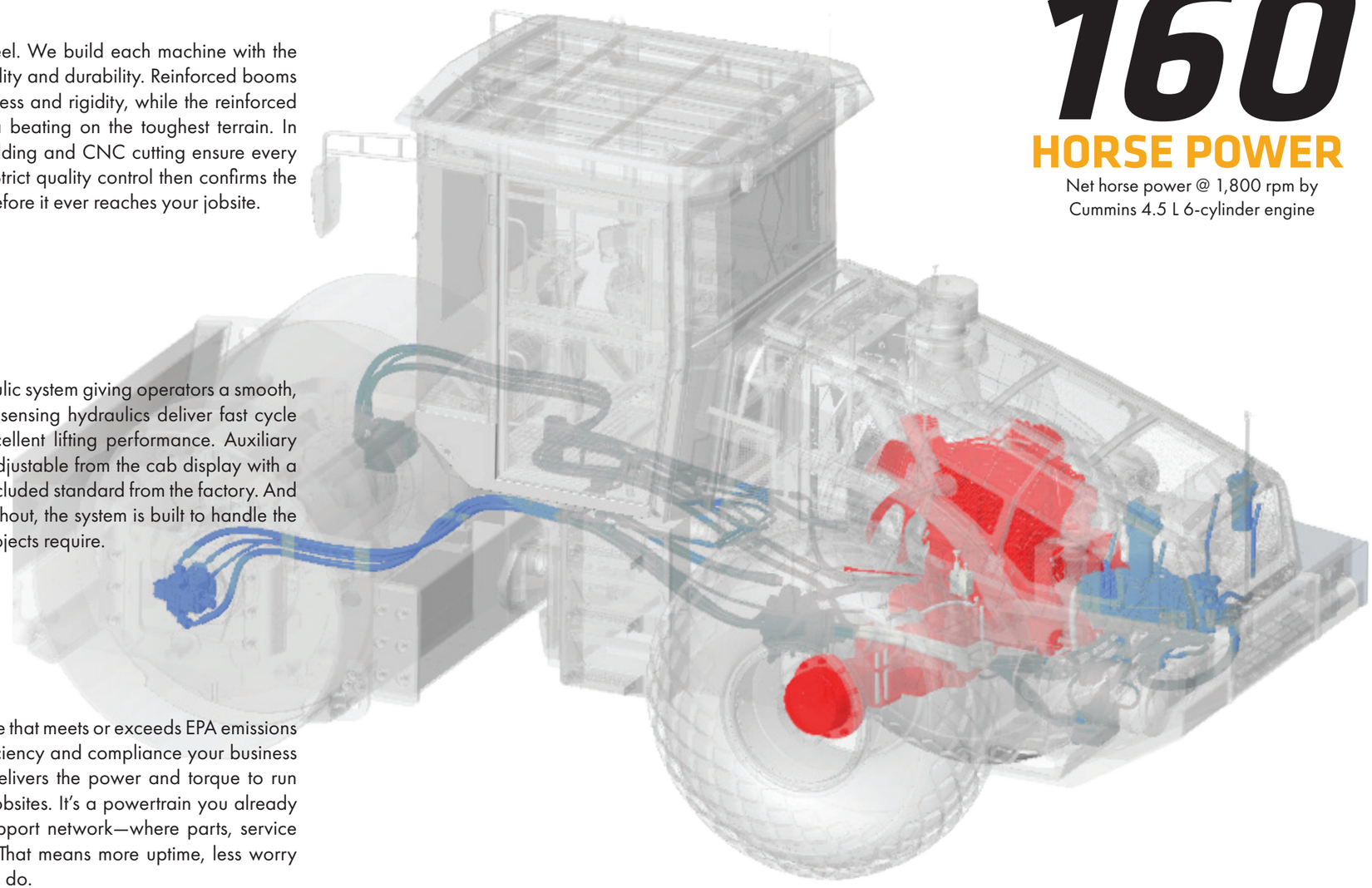

160

HORSE POWER

Net horse power @ 1,800 rpm by Cummins 4.5 L 6-cylinder engine

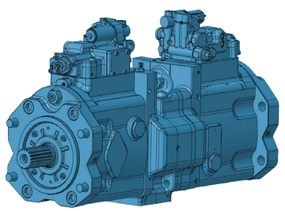

HYDRAULIC SYSTEM

The SSR212 uses a pilot-controlled hydraulic system giving operators a smooth, predictable feel at the controls. Its load-sensing hydraulics deliver fast cycle speeds, strong breakout forces and excellent lifting performance. Auxiliary hydraulic pressure and flow are easily adjustable from the cab display with a case drain and dedicated rotate circuit included standard from the factory. And with Parker hydraulic components throughout, the system is built to handle the high stress and demanding work your projects require.

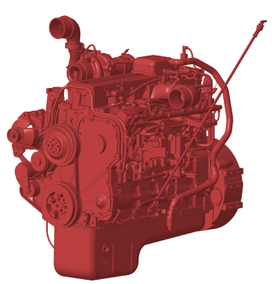

POWERTRAIN BY CUMMINS

Powered by a Cummins 4.5L diesel engine that meets or exceeds EPA emissions regulations, the SSR212 provides the efficiency and compliance your business needs. With 160 hp at 1,800 rpm, it delivers the power and torque to run day and night on the most demanding jobsites. It's a powertrain you already know and trust—backed by a major support network—where parts, service and expertise are always within reach. That means more uptime, less worry and a machine that works as hard as you do.



SSR212

84” SINGLE DRUM
ROLLER

27,337 LBS OPERATING WEIGHT
84” VIBRATION DRUM
24~32/28~36 VIBRATION FREQUENCY LOW & HIGH

TECHNICAL SPECIFICATIONS

ENGINE	
Model	Cummins QSB4.5
Emission	T4F
Rated Gross Power	160 hp
Max Torque	460 @ 1,500 lb-ft / rpm
Displacement	274.6 cu. in.
Bore	4”
Stroke	5”
Low / Econ / Rated RPM	900 / 1,600 / 1,800 rpm

LOAD	
Operating Weight	27,337 lbs
Static Linear Load	3,970 lbs/in.
Static Weight on Drum	12,015 lbs
Static Weight on Tires	15,323 lbs
Centrifugal Force	73,300 lbf
Nominal Amplitude	0.071 / 0.035 in.

COMPACTION	
Centrifugal Force	62960 / 48560 lbf
Vibration Amplitude	0.071 / 0.035 in.
Vibration Frequency	36 / 32 Hz
Drum Width	84”
Drum Diameter	4’ 11”
Static Linear Load	182 lbs/in.

SAFETY PRIORITIZED

We design for safety first. Operators get secure handrails, steps, and antislip on top, OEM FOPS cab guarding, and a ROPS-verified cab with multiple exit points. A three-inch seatbelt, emergency shut-off and fire extinguisher add protection inside, while cameras, alarms, and 360° lighting enhance awareness for a safer jobsite.

SANY America Inc. reserves the right to change these specifications at any time without prior notification. ©2026 SANY America Inc. HEXPS26SSR212001

SSR212

84” SINGLE DRUM
ROLLER

26,676 LBS OPERATING WEIGHT
84” VIBRATION DRUM
36/32 VIBRATION FREQUENCY HIGHT & LOW

STANDARD FEATURES

POWERTRAIN

- QSB4.5 Cummins T4F
- U.S. EPA Tier 4 Final / EU Stage V emissions standards
- Three speed throttle switch
- Dual-element dry air filter
- Electronic engine control
- High torque drum drive reducer
- Fuel filter with water separator
- Full-flow oil filter
- Turbocharger with charge air cooler
- 500-hour engine oil change interval
- Engine air precleaner

VIBRATORY SYSTEM

- Smooth drum
- Dual amplitude, selective frequency
- Dual adjustable steel smooth drum scrapers

ELECTRICAL

- 24 volt electrical system
- Ground level electrical disconnect (lockout tag out)
- 850 cold cranking amps battery capacity
- Positive-terminal battery covers
- Rearview camera
- Back-up alarm
- Emergency stop
- Rotating beacon light
- LED work lights

OPERATOR’S STATION

- Open platform with handrails/guardrails
- AM/FM radio with USB charging and Bluetooth® connectivity
- Seatbelt
- ROPS/FOPS cab
- 12 and 24v outlets 60 watt 5 amp
- Slef-defrost rear window
- Automatic heating and cooling control
- Deluxe heated air suspension cloth seat with adjustable armrests
- Heavy-duty floor mat
- Front windshield wiper with variable speeds
- Illuminated gauge: diesel exhaust fluid, engine coolant, and fuel levels
- Horn
- Hour meter, electric
- Internal rearview mirror
- External rearview mirrors
- Sunvisor
- Adjustable, tilting steering wheel
- Multifunction, touchscreen LCD monitor with: diagnostic capability / multiple-languages
- Single lever control for travel and vibration
- Engine check, engine coolant temperature indicator
- Light with audible alarm, engine oil pressure indicator light with audible alarm, low-alternator charge indicator light, low-fuel indicator light, low DEF indication with audible alarm, fault code alert indicator, fuel rate display, wiper-mode indicator, work lights on indicator, and work-mode indicator
- Air-suspension, heated seat
- Hydraulic oil filter restriction indicator light
- Cup holder
- Interior lighting
- Protection screens for cab front, rear, and side

OTHER SPECIFICATIONS

WEIGHTS

Weight at Axle	11,398 lbs
Weight with Padfoot Kit	29,321 lbs

ELECTRICAL

Battery Model	6-QWL-120
Battery Capacity	120 Ah
CCA	680 BCI
USB Port	Yes

DRIVE SYSTEM

Gradeability (Smooth Drum)	60%
Oscillation Angle	±12°

SOUND LEVEL

Operator Ear (Cab)	76 dB(A)
External	107 dB(A)

PADFOOT KIT

Number of Pads	120 pcs
Pad Height	4”
External	17 in^2

In the interest of continual equipment development, SANY America Inc. reserves the right to change these specifications at any time without prior notification.
©2026 SANY America Inc. HEXPS26SSR212001

In the interest of continual equipment development, SANY America Inc. reserves the right to change these specifications at any time without prior notification.
©2026 SANY America Inc. HEXPS25SSR212001

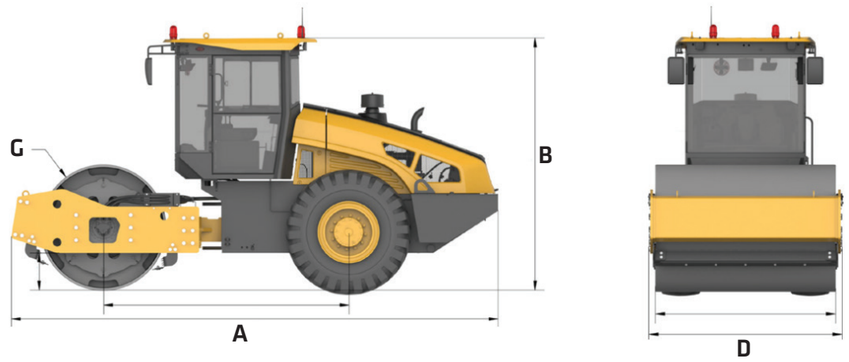

DIMENSIONS		
A	Overall Length	19’
B	Overall Height (Smooth Drum)	9’ 10”
C	Overall Height (Padfoot)	10’
D	Overall Width	7’ 6”
E	Inside Turning Radius	11’ 8”
F	Min. Outside Turning Radius	19’ 2”
G	Drum Shell Thickness	1”

SERVICE REFILL CAPACITIES	
Battery	55.5 US gal
Fuel Tank	21.1 US gal
Hydraulic Oil Tank	4.2 gal
DEF Tank	5.3 gal
Cooling System	4 gal
Engine Oil (with filter)	2.6 gal
Vibratory Drum Oil	0.9 gal
Drum Final Drive Oil	4.2 gal
Rear Axle Oil	1.76 lbs
Travel Bearing Grease	13.2 gal

In the interest of continual equipment development, SANY America Inc. reserves the right to change these specifications at any time without prior notification.
©2026 SANY America Inc. HEXPS26SSR212001

INDUSTRY’S STRONGEST STANDARD WARRANTY 3-YEAR* 3,000 HOURS

*Warranty applies to 2026 Crane, Telehandler, Grader and Roller models only.

SANY America Inc. 318 SANY Way
Peachtree City, Georgia 30269
470.552.SANY sanyamerica.com

CONNECTED, **INFORMED**, IN CONTROL
TECHNOLOGY

CONNECTED EVI TELEMATICS

EVI is SANY’s proprietary telematics platform and is available through your local dealer. This dashboard lets you track and geofence the machine, view reports on consumption and run time, monitor error codes and manage your SANY fleet, all with more features continually being launched to keep you connected and in control.

HIGH-RESOLUTION INSTRUMENT PANEL

The SSR212 features a modern instrument panel with a high-resolution digital display that supports multiple languages and provides clear readings of engine speed, fuel level and hydraulic status among other critical machine operational status readings. Operators can enter a password to start the engine, adding a layer of security.

ADJUSTABLE HYDRAULIC CONTROLS

Electric over hydraulic joysticks allow operators to adjust auxiliary flow from the cab, tailoring performance for different attachments. The ISO/SAE pattern change simplifies switching between control schemes. Integrated ride control smooths out loader travel, while the boom float function lets the bucket follow the ground contour, ideal for finish grading and snow removal.



DO EVERYTHING

Control machine functions and hydraulic adjustments, through an intuitive digital display and joystick interface.

12 POINTS
of heated seat adjustablity.

DESIGNED FOR **COMFORT**
ALL SHIFT LONG

This spacious cab is built for comfort and intuitiveness with safety and ergonomics at the core. The adjustable seat allows each operator to achieve their ideal position, plus the heated and air-suspension functions for all-day comfort. The SSR212`s digital display places common gauges and hydraulic adjustments within easy reach. The enclosed cab is equipped with a standard heating and air-conditioning system to maintain optimal comfort regardless of external conditions. In addition, Bluetooth connectivity allows for reliable hands-free communication. Large cabin glass panels and additional exterior mirrors maximize visibility of the work area, helping operators stay comfortable and productive throughout the shift.

BUILT **AROUND THE**
OPERATOR



CUSTOM OPERATOR ERGONOMICS

The cab is designed around the operator. A heated, air suspension seat with armrests absorbs vibration and adjusts to fit operators of all sizes. The steering column and joysticks tilt for operator comfort, while intuitive joysticks with FNR switches reduce hand movement. Climate control and Bluetooth connectivity keep the cab comfortable and connected during long shifts.

OPTIMAL JOBSITE AWARENESS

Large glass areas and slim cab pillars provide excellent sightlines to the loader bucket and backhoe. LED work lights and a rotating beacon illuminate the work area and warn bystanders. The extendible stick's design maintains visibility of the digging edge at full extension, helping operators dig precisely even in deep trenches. Optional mirrors or camera systems can be added to further enhance situational awareness.

INTENTIONALLY **ENGINEERED FOR SERVICE**

UPTIME IS OUR PRIORITY

With fast diagnostics, streamlined repairs and software tools for remote support it's easy to keep your SANY excavator running strong. Our local dealer network, stretching across North America, provides quick response and maximizes your productivity.

DEDICATED TO SUPPORT

We're expanding our U.S. footprint with local engineering, quality assurance and service teams—backed by a multi-year investment in support, training, and parts.

EASE OF ACCESS

Its spacious compartments offer ample room for tools, filters, and components, ensuring efficient inspections and replacements that minimize downtime on the job site.

FAST DAILY PRE-CHECKS

Machines are designed so operators can safely and easily inspect critical systems—mostly from the ground—for quick visual and manual checks.

PARTS ON THE SHELF READY TO SHIP

We continually expand parts inventory across our major North American distribution centers and improve forecasting to keep high-demand components in stock. This longterm strategy ensures critical parts are ready to ship when they're needed most.





#1 FASTEST GROWING

support network in North America.



WE'VE GOT YOUR BACK

At SANY, we see every customer as a relationship whose success is directly tied to ours. We focus on keeping you productive, because when your machines are running, your business is winning. Our warranty support, faster claim approvals, not just our equipment. Your feedback fuels continuous improvement—real updates to software, hydraulics, and performance through close collaboration with key suppliers. With expanding U.S. support, trained technicians, ongoing investments, and stronger parts availability, we stay by your side so your business can keep moving forward.



CUSTOMERS FIRST ALWAYS

At SANY America, everything begins with you. We design machines that make your work safer, more efficient, and more profitable—and we stand behind them with U.S.-based support you can count on. From ergonomic cabs and superior visibility to quick daily checks and dependable uptime, every feature is engineered around real operator needs and real jobsite demands. Your feedback directly drives our product improvements, accelerating software updates, hydraulic refinements, and long-term durability enhancements. With expanding American facilities, local engineering and service teams, certified technicians, and three parts distribution centers nationwide, we operate as your committed business partner—focused on your success today and every day ahead.

INDUSTRY'S **STRONGEST** STANDARD WARRANTY

SANY America delivers the most comprehensive standard warranty in the industry—protecting your investment from day one.

- **3 years / 3,000 hours of full machine coverage included with every roller**
- **Lower total operating risk and fewer unexpected costs over machine life**
- **Confidence in long-term durability backed by factory engineering and testing**
- **Stronger coverage than leading OEM competitors – standard, not add-on**

Choosing SANY means choosing equipment built to work—and a partner committed to standing behind your success.

FINANCING THAT WORKS AS HARD AS YOU DO

Smart financing that makes owning SANY equipment faster, easier, and affordable.

- **Quick approvals – many customers approved in under 5 minutes**
- **Simple mobile app for secure document signing and easy payment management**
- **Flexible terms and competitive promotions, including 0% for 60 months**
- **Faster approvals for repeat customers to keep your fleet growing**
- **Top-rated experience with a 4.95 out of 5 Trustpilot score**

Financing with SANY is built to support your business growth every step of the way.

TOTAL COST OF OWNERSHIP

SANY machines are engineered to deliver a stronger return on investment by lowering the true cost of ownership over the life of your equipment.

- **Fuel-efficient performance reduces operating costs every hour the machine runs**
- **Extended service intervals minimize downtime and maintenance expense**
- **Parts cost management keeps replacement and wear items affordable**
- **High resale value helps protect your investment over time**
- **More standard features from the factory reduce the need for costly add-ons**

Every detail is designed to help you earn more, spend less, and get maximum value from every machine you own.



*Warranty applies to 2026 Crane, Telehandler, Grader and Roller models only.

SANY America Inc.
318 SANY Way
Peachtree City | GA 30269
T | 470-552-SANY
HEXBR26SSR212001

sanyamerica.com

In the interest of continual equipment development, SANY America Inc. reserves the right to change these specifications at any time without prior notification.

© 2026 SANY America Inc.